Bourdon Tube Pressure Gauges

With integrated pressure transmitter DMU
Bayonet ring case stainless steel
Safety category S3 according to DIN EN 837-1

RSCh/RSChOe
100 / 160 – 3

Applications

The Bourdon tube pressure gauges RSCh and RSChOe with integrated pressure transmitter DMU are suitable for the measurement of liquid and gaseous media from 0 – 0.6 bar up to 0 – 1600 bar.

The pressure transmitter DMU, integrated in a Bourdon tube pressure gauge, allows not only the analogue display of the pressure gauge, but also the electrical remote transmission of the measured pressure value for further processing.

Available output signals are 4…20 mA, 0…20 mA or 0…10 V.

Construction

The measuring point of the pressure transmitter is separated from the measuring unit of the Bourdon tube pressure gauge, so that both measurements are independent from each other.
A defective movement of the pressure gauge does not influence the measurement of the pressure transmitter.

Sensors of the pressure transmitter DMU

≤ 0 – 60 bar	piezoresistive sensor
≥ 0 – 100 bar to 0 – 1600 bar	thin film sensor

Standard Versions

Piezoresistive Sensor (up to and including 60 bar)

Output signal		Supply voltage	Load impedance
4…20 mA	2 wire	10…40 V DC	(U_B – 10 V) / 0.02 A
0…20 mA	3-wire	8…28 V DC	(U_B – 8 V) / 0.02 A
0…10 V	3-wire	13…28 V DC	min. 10 kΩ

Thin Film Sensor (from 100 bar onwards)

Output signal		Supply voltage	Load impedance
4…20 mA	2 wire	9…30 V DC	(U_B – 9 V) / 0.02 A
0…20 mA	3-wire	3…30 V DC	(U_B – 9 V) / 0.02 A
0…10 V	3-wire	14…30 V DC	min. 10 kΩ

Measuring Accuracy
Better than ±0.5 % FS (including non-linearity, hysteresis)

Temperature Limitations for Pressure Gauges with DMU

Storage temperature:	–40 / +70 °C
	–20 / +70 °C (for oil filling)
Rated temperature:	–40 / +60 °C
	–20 / +60 °C (for oil filling)
Medium temperature:	max. +80 °C

Rated Temperature Range for DMU

Piezoresistive sensor:	–10 / +60 °C
Thin film sensor:	–25 / +60 °C

Temperature Influence in the Rated Temperature Range

Zero point:	< 0.3 % FS / 10 K
Span:	< 0.2 % FS / 10 K

Reference Temperature
+20 °C

Long-term Stability of Zero Point and Span
Better than ±0.25 % p. a.

Installation Option

The installation is possible for the following pressure gauges:
models RSCh/RSChOe 100/160 – 3
(technical data see page 2)

Electrical Connection

Terminal box; the terminals are numbered according to the wiring diagrams. A protective conductor terminal is provided. The terminal box is equipped with a screwed cable gland M20x1.5 with strain relief.

For assuring the electromagnetic compatibility (EMC), please use a shielded cable (e.g. LP/LiMYCY). The shield has to be connected to the case.

Options and Special Versions

See page 4

Ordering Information

See page 4

ARMANO
ARMANO Messtechnik GmbH

Location Beierfeld
Am Gewerbepark 9 • 08344 Grünhain-Beierfeld
Tel.: +49 3774 58 – 0 • Fax: +49 3774 58 – 545
mail@armano-beierfeld.com

Location Wesel
Manometerstraße 5 • 46487 Wesel-Ginderich
Tel.: +49 2803 9130 – 0 • Fax: +49 2803 1035
mail@armano-wesel.com

Standard Versions

Information on general and metrological features (e.g. load limits/temperature resistance) and standard pressure ranges/scale divisions of the pressure gauge models RSCh 100/160 and RSChOe 100/160 can be found in model overview 1000. In data sheet 1600, the standard version is described in detail.

Accuracy (DIN EN 837-1)
Class 1.0

Case
With bayonet ring, stainless steel 304 (1.4301)

Degree of Protection (DIN EN 60 529/IEC 529)
IP54
IP65 for model RSChOe

Blow-out Device
Blow-out back; when pressure increases in the case, the entire case back separates, allowing full relief

Case Ventilation
Model RSChOe via screw with ventilation bore

Case Filling
Model RSCh**Oe**: special oil

Nominal Case Size
100, 160 mm (4, 6")

Wetted Parts

Connection:	stainless steel 316L (1.4404)
Bourdon tube:	stainless steel 316L (1.4404)
	gas-shielded arc welding
	≤40 bar c-form
	≥60 bar helical form
	1600 bar NiFe-alloy, helical form

Case Configuration

Connection:	screwed
Position of the connection:	bottom connection
Mounting device:	- without
	- back flange for surface mounting (**Rh**)

Pressure Ranges (DIN EN 837-1)
0 – 0.6 bar to 0 – 1600 bar

Process Connection
G ½ B

Window
Laminated safety glass

Movement
Stainless steel

Dial
Aluminum white, scale black

Pointer
Aluminum black

Safety Category According to DIN EN 837-1
S3, safety pressure gauge with break-proof solid front and blow-out back,
proved: pressure ranges up to 1000 bar,
bottom connection: RSCh and RSChOe
marking Ⓢ

Ordering Information, Options

See page 4

Further Options

- Position of connection radial at 3 o'clock, 9 o'clock, 12 o'clock or other than vertical installation (90°):
  - for models without case filling
- NCS 100 case parts 316L (1.4404)
- GOST version for Russia and Kazakhstan
- Sour gas-resistant version according to NACE

Special Versions Upon Request

- Other process connections, e.g. high pressure connection with male thread (from 0 – 60 bar onwards)
- Other pressure ranges and/or special scales, e.g. dual scale bar/psi, coloured fields or ranges, dial inscriptions, negative scale
- NCS 160 case parts 316L (1.4404)
- Increased degree of protection, e.g. IP65 without case filling
- Other position of connection or other than vertical installation (90°):
  - for filled models

Accessories

Chemical seals:	see catalogue heading 7
Electrical:	see data sheet 1600.90 limit switch contact assembly and catalogue heading 9.1
Other accessory:	see catalogue heading 11

Case Configurations, Code Letters, Dimensional Data and Weight

Bottom Connection

without mounting device

without code letters

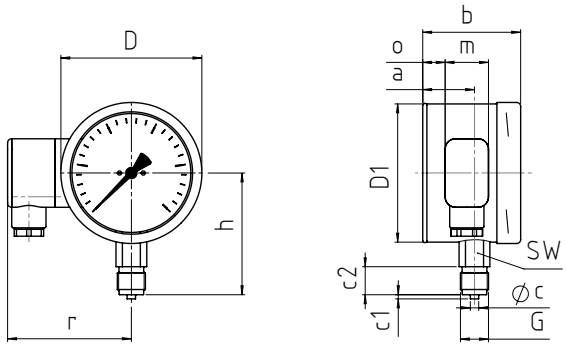

with back flange for surface mounting

code letters **Rh**

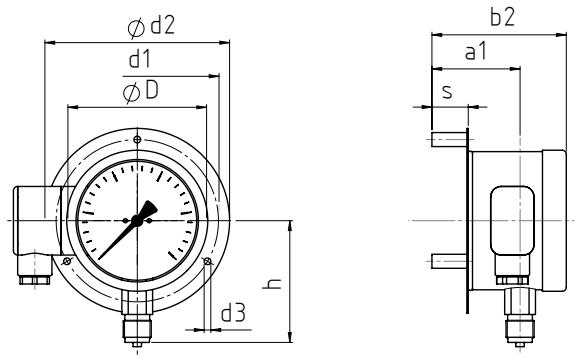

Dimensional Data (mm/inch) and Weight (kg/lb)

NCS	a	a1	b	b2	c	c1	c2	D	D1	d1	d2	d3	G	h±1	s	SW	r	o	m	approx. weight RSCh	approx. weight RSChOe
100 **4"**	40 **1.57**	66 **2.6**	73 **2.87**	99 **3.9**	6 **0.24**	3 **0.12**	20 **0.79**	101 **3.98**	99 **3.9**	116 **4.57**	132 **5.2**	4.8 **0.19**	G ½ B	87 **3.43**	26 **1.02**	22 **0.87**	88 **3.46**	16 **0.63**	31 **1.22**	0.83 **1.83**	1.20 **2.65**
160 **6"**	40 **1.57**	70 **2.76**	78 **3.07**	108 **4.25**	6 **0.24**	3 **0.12**	20 **0.79**	161 **6.34**	159 **6.26**	178 **7.01**	196 **7.72**	5.8 **0.23**	G ½ B	115 **4.53**	31.5 **1.24**	22 **0.87**	119 **4.69**	16 **0.63**	31 **1.22**	1.70 **3.75**	3.20 **7.05**

Terminal box

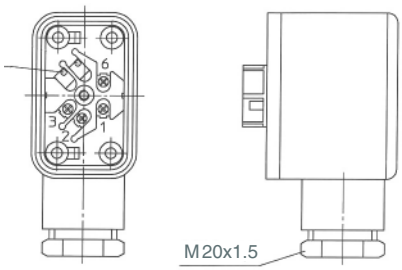

Wiring Diagrams

2-wire connection 4…20 mA

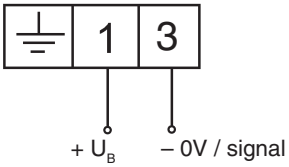

3-wire connection 0…20 mA / 0…10 V

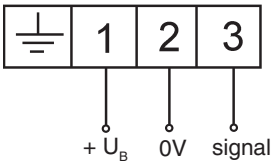

Ordering Information and Options

Basic Model:	Bourdon Tube Pressure Gauge with Bayonet Ring Case		RSCh
Case filling:	without		without code letters
	special oil		**Oe**
Nominal case size:	case Ø 100, 160 mm (4, 6")		**100, 160**
Wetted material:	stainless steel		**– 3**
Case configuration:	case / connection	screwed	without code letters
	position of the connection	bottom connection	without code letters
	mounting device	without	without code letters
		back flange for surface mounting	**Rh**
Pressure ranges:	see data sheet 1600	e.g.	**0 – 6 bar**
Process connection:	standard thread	G½B	**G½B**

Please add

	Pressure Transmitter	DMU
Output signal:	see page 1	**4…20 mA**

Example: **RSChOe 100 – 3 Rh, 0 – 6 bar, G½B, with DMU 4…20 mA**

Options:	adjustable pointer with aluminum mechanism	
	red mark	on the dial
	plastic clip	red or green, external at the bayonet ring
	stationary red pointer	on the dial adjustable with removable ring
	indication accuracy Grade 2A (±0.5 %) according to ASME B 40.1[1]	
	special adjustment (reference points = odd values, e.g. 100 KN = 8.735 bar)	
	case ventilation no. 22 for outdoor installation	
	case polished	
	bayonet ring polished	
	leak test of the measuring unit	with helium leak detection up to 10^{-9} mbar l/s for types – 3 and – 6
	wetted parts free of grease and oil up to 0 – 600 bar (0 – 10 000 psi)	adjustment ≤250 bar (3 000 psi) with dry air, ≥400 bar (5 000 psi) with distilled water, dial marking: symbol crossed out oil can
	oxygen version up to 0 – 600 bar (0 – 10 000 psi)[2]	free of grease and oil as above, additional restrictor screw in the inlet port, orifice Ø 0.3 mm (0.01") dial inscription: oxygen
	silicone-free version	
	restrictor screw in the pressure inlet port	orifice Ø 0.8 mm (0.03")
		orifice Ø 0.6 mm (0.02")
		orifice Ø 0.3 mm (0.01")
	instrument tag	stainless steel plate 12 x 55 mm (0.47 x 2.17"), wire mounting
		sticker on the case coverage

Special Versions: Please describe your requirements in cleartext!

[1] for pressure ranges ≤ 10 000 psi
[2] for instruments without case filling

© 2021 ARMANO Messtechnik GmbH · Technical changes, replacement of materials and printing errors excepted!